DS-2CD3663G2-IZS
6 MP AcuSense Motorized Varifocal Bullet Network Camera

AcuSense



Hikvision has been dedicated to develop products with security since established. Hikvision always follows security by design principle and has adopted many methods of security technologies into our product development lifecycle, including terminal security, data security, application security, network security, and privacy protection. In the meantime, the security technologies used by Hikvision are all in compliance with local applicable laws and safety regulations. These security measures could enhance product's cyber security protection capability and protect your devices as well as your data from malicious cyber attacks.

- High quality imaging with 6 MP resolution
- Motorized varifocal lens for easy installation and monitoring
- Efficient H.265+ compression technology
- Clear imaging against strong backlight due to 120 dB true WDR technology
- Focus on human and vehicle targets classification based on deep learning
- Audio and alarm interface available
- Water and dust resistant (IP67) and vandal-resistant (IK10)
- Junction box included in the package

▪ Specification

Camera		
Image Sensor	9.5	1/2.8" Progressive Scan CMOS
Max. Resolution	9.1	3200 × 1800
Min. Illumination	9.4	Color: 0.005 Lux @ (F1.6, AGC ON), B/W: 0 Lux with IR
Shutter Time		1/3 s to 1/100,000 s
Day & Night	9.3	IR cut filter
Angle Adjustment		Pan: 0° to 355°, tilt: 0° to 90°, rotate: 0° to 360°
Lens		
Lens Type	9.6	Varifocal lens, motorized lens, 2.7 to 13.5 mm
Focal Length & FOV		2.7 to 13.5 mm, horizontal FOV 107° to 32°, vertical FOV 56° to 18°, diagonal FOV 128° to 37°
Lens Mount		Ø14
Iris Type		Auto-iris
Aperture		F1.6
DORI		
DORI		2.7 to 13.5 mm: D: 78 m to 242 m, O: 31 m to 96 m, R: 15 m to 48 m, I: 7 m to 24 m
Illuminator		
Supplement Light Type		IR
Supplement Light Range		Up to 60 m
Smart Supplement Light		Yes
IR Wavelength		850 nm
Video		
Main Stream	9.2	50 Hz: 25 fps (3200 × 1800, 2688 × 1520, 1920 × 1080, 1280 × 720) 60 Hz: 20 fps (3200 × 1800) 30 fps (2688 × 1520, 1920 × 1080, 1280 × 720)
Sub-Stream	9.10	50 Hz: 25 fps (1280 × 720, 640 × 480, 640 × 360) 60 Hz: 30 fps (1280 × 720, 640 × 480, 640 × 360)
Third Stream		50 Hz: 10 fps (1920 × 1080, 1280 × 720, 640 × 480, 640 × 360) 60 Hz: 10 fps (1920 × 1080, 1280 × 720, 640 × 480, 640 × 360) *Third stream is supported under certain settings.
Video Compression		Main stream: H.265/H.264/H.264+/H.265+ Sub-stream: H.265/H.264/MJPEG Third stream: H.265/H.264 *Third stream is supported under certain settings.
Video Bit Rate		32 Kbps to 16 Mbps
H.264 Type	9.12	Baseline Profile/Main Profile/High Profile
H.265 Type		Main Profile
Bit Rate Control		CBR/VBR
Scalable Video Coding (SVC)		H.264 and H.265 encoding
Region of Interest (ROI)		5 fixed regions for main stream and sub-stream
Target Cropping		Yes

Audio	
Audio Compression	G.711/G.722.1/G.726/MP2L2/PCM/MP3/AAC-LC
Audio Bit Rate	64 Kbps (G.711ulaw/G.711alaw)/16 Kbps (G.722.1)/16 Kbps (G.726)/32 to 192 Kbps (MP2L2)/8 to 320 Kbps (MP3)/16 to 64 Kbps (AAC-LC)
Audio Sampling Rate	8 kHz/16 kHz/32 kHz/44.1 kHz/48 kHz
Environment Noise Filtering	Yes
Network 9.17	
Protocols	TCP/IP, ICMP, HTTP, HTTPS, FTP, DHCP, DNS, DDNS, RTP, RTSP, NTP, UPnP, SMTP, IGMP, 802.1X, QoS, IPv4, IPv6, UDP, Bonjour, SSL/TLS, PPPoE, SNMP, WebSocket, WebSockets 9.13
Simultaneous Live View	Up to 6 channels 9.19
API 9.11	Open Network Video Interface (Profile S, Profile G), ISAPI, SDK, ISUP
User/Host	Up to 32 users. 3 user levels: administrator, operator and user
Security	Password protection, complicated password, HTTPS encryption, IP address filter, Security Audit Log, basic and digest authentication for HTTP/HTTPS, TLS 1.1/1.2, WSSE and digest authentication for Open Network Video Interface
Network Storage	NAS (NFS, SMB/CIFS), auto network replenishment (ANR) Together with high-end Hikvision memory card, memory card encryption and health detection are supported.
Client	iVMS-4200, Hik-Connect, Hik-Central
Web Browser	Plug-in required live view: IE 10, IE 11 Plug-in free live view : Chrome 57.0+, Firefox 52.0+, Edge 89+ Local service: Chrome 57.0+, Firefox 52.0+, Edge 89+
Image	
Image Parameters Switch	Yes
Image Settings	Rotate, mirror, privacy mask, saturation, brightness, contrast, sharpness, gain, white balance adjustable by client software or web browser
Day/Night Switch	Day, Night, Auto, Schedule
9.9 Wide Dynamic Range (WDR)	120 dB
SNR	≥ 52 dB
Image Enhancement	BLC, HLC, 3D DNR
Interface	
Ethernet Interface 9.16	1 RJ45 10 M/100 M self-adaptive Ethernet port
On-Board Storage 9.18	Built-in memory card slot, support microSD/microSDHC/microSDXC card, up to 512 GB
Audio	1 input (line in), two-core terminal block, max. input amplitude: 3.3 Vpp, input impedance: 4.7 KΩ, interface type: non-equilibrium; 1 output (line out), two-core terminal block, max. output amplitude: 3.3 Vpp, output impedance: 100 Ω, interface type: non-equilibrium
Alarm	1 input, 1 output (max. 24 VDC/24 VAC, 1 A)
Reset Key	Yes
Event	
Basic Event 9.7	Motion detection (support alarm triggering by specified target types (human and vehicle)), video tampering alarm, exception
Smart Event 9.8	Line crossing detection, intrusion detection, region entrance detection, region exiting detection, unattended baggage detection, object removal detection

Linkage	Upload to FTP/NAS/memory card, notify surveillance center, send email, trigger recording, trigger capture, trigger alarm output
General	
Power 9.16	12 VDC ± 25%, 1.08 A, max. 13 W, Ø5.5 mm coaxial power plug PoE: IEEE 802.3at, Class 4, 42.5 V to 57 V, 0.36 A to 0.27 A, max. 15 W
Material	Aluminum alloy body
Dimension	Ø105.1 mm × 348.5 mm (Ø4.1" × 13.7")
Package Dimension	385 mm × 190 mm × 180 mm (15.2" × 7.5" × 7.1")
Weight	Approx. 1390 g (3 lb.)
With Package Weight	Approx. 2236 g (4.9 lb.)
Storage Conditions	-30 °C to 60 °C (-22 °F to 140 °F). Humidity 95% or less (non-condensing)
Startup and Operating Conditions 9.15	-30 °C to 60 °C (-22 °F to 140 °F). Humidity 95% or less (non-condensing)
General Function	Anti-banding, heartbeat, password reset via email, pixel counter
Language	33 languages: English, Russian, Estonian, Bulgarian, Hungarian, Greek, German, Italian, Czech, Slovak, French, Polish, Dutch, Portuguese, Spanish, Romanian, Danish, Swedish, Norwegian, Finnish, Croatian, Slovenian, Serbian, Turkish, Korean, Traditional Chinese, Thai, Vietnamese, Japanese, Latvian, Lithuanian, Portuguese (Brazil), Ukrainian
Approval	
EMC 9.20	FCC (47 CFR Part 15, Subpart B); CE-EMC (EN 55032: 2015, EN 61000-3-2: 2014, EN 61000-3-3: 2013, EN 50130-4: 2011 +A1: 2014); RCM (AS/NZS CISPR 32: 2015); IC (ICES-003: Issue 6, 2016); KC (KN 32: 2015, KN 35: 2015)
Safety 9.20	UL (UL 60950-1); CB (IEC 60950-1:2005 + Am 1:2009 + Am 2:2013); CE-LVD (EN 60950-1:2005 + Am 1:2009 + Am 2:2013); BIS (IS 13252(Part 1):2010+A1:2013+A2:2015); LOA (IEC/EN 60950-1)
Environment	CE-RoHS (2011/65/EU); WEEE (2012/19/EU); Reach (Regulation (EC) No 1907/2006)
Protection 9.14	IP67 (IEC 60529-2013); IK10 (IEC 62262: 2002)

▪ Typical Application

Hikvision products are classified into three levels according to their anti-corrosion performance. Refer to the following description to choose for your using environment.

This model has NO SPECIFIC PROTECTION.

Level	Description
Top-level protection	Hikvision products at this level are equipped for use in areas where professional anti-corrosion protection is a must. Typical application scenarios include coastlines,

	docks, chemical plants, and more.
Moderate protection	Hikvision products at this level are equipped for use in areas with moderate anti-corrosion demands. Typical application scenarios include coastal areas about 2 kilometers (1.24 miles) away from coastlines, as well as areas affected by acid rain.
No specific protection	Hikvision products at this level are equipped for use in areas where no specific anti-corrosion protection is needed.

▪ Available Model

DS-2CD3663G2-IZS(2.7-13.5mm)

▪ Dimension

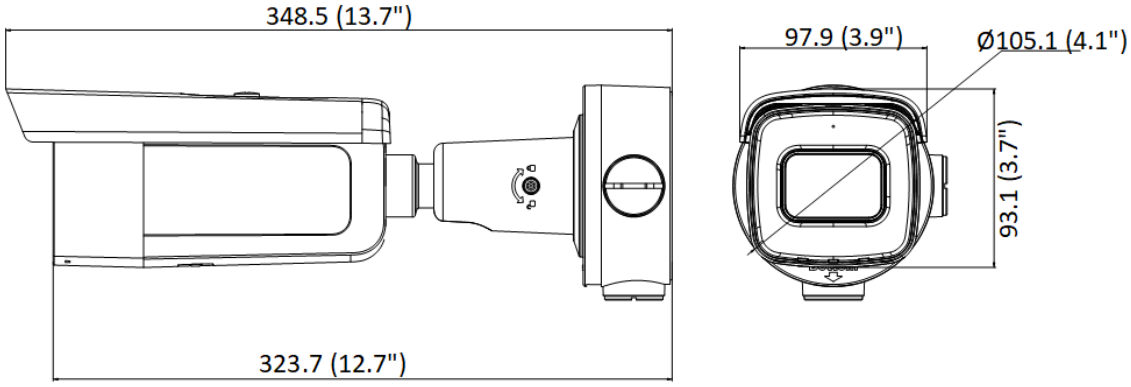

Unit: mm (inch)

▪ Accessory

▪ Included

DS-1260ZJ Junction box


▪ Optional

DS-1275ZJ-SUS Vertical pole mount	DS-1276ZJ-SUS Corner mount	DS-1275ZJ-S-SUS Vertical pole mount
		

Headquarters
No.555 Qianmo Road, Binjiang District,
Hangzhou 310051, China
T +86-571-8807-5998
www.hikvision.com

Follow us on social media to get the latest product and solution information.

Hikvision HikvisionHQ HikvisionHQ Hikvision_Global Hikvision Corporate Channel hikvisionhq

©Hikvision Digital Technology Co., Ltd. 2023 I Data subject to change without notice I