advidia

M-26-V-V2

2MP VF Dome IP Camera

Overview

- 2 Megapixel IR
- True WDR120dB
- 2.8-12mm Varifocal Lens
- H.265, H.264, MJPEG
- IP67, IK10
- Built-in Mic
- NDAA Compliant
- ONVIF Profile G, S, T



Technical Specifications

Device	
Image Sensor:	1 / 2.7" Progressive Scan CMOS
Min Illumination:	Color: 0.003 Lux (F1.6, AGC ON) | 0 Lux with IR on
Shutter Time:	Auto/Manual, 1 ~ 1/100000s
Lens:	2.8 ~ 12mm, AF automatic focusing and motorized zoom lens
WDR:	120 dB
S/N:	>52dB
Angle of View:	H:103.6°~ 33.4° V:54.8°~ 18.7° O:107.9°~37.8°
Angle Adjustment:	Pan: 3° ~ 360° | Tilt: 0° ~ 70° | Rotate: 3° ~ 360°
Day & Night:	IR-Cut Filter with Auto Switch (ICR)
IR Range:	Up to 40m (131.2ft) IR range
Compression Standard	
Video Compression:	H.265, H.264, MJPEG
Video Bit Rate:	128 Kbps~6 Mbps
Two Stream:	Yes
Analytics:	Motion detection, Ultra motion detection, Tampering alarm, Audio detection, Cross line (based on human body detection), Intrusion (based on human body detection)
Image	
Max. Image Resolution:	1920 x 1080
Frame Rate:	30fps (1920 x 1080)
ROI Codec:	Support (Up to 8 areas)
Image Setting:	White Balance, Digital Noise Reduction, Smart IR, Flip, HLC, BLC, Digital defog
Privacy Mask:	4 Areas

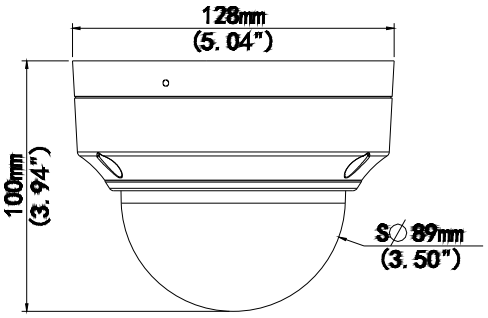

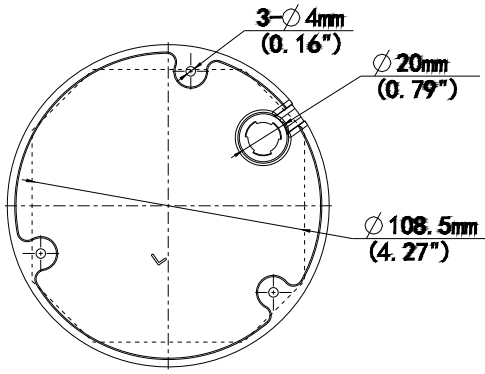

advidia

M-26-V-V2

2MP VF Dome IP Camera

Technical Specifications

Network					
Protocols:	IPv4, IGMP, ICMP, ARP, TCP, UDP, DHCP, RTP, RTSP, RTCP, RTMP, DNS, DDNS, NTP, FTP, UPnP, HTTP, HTTPS, SMTP, SSL/TLS, QoS, SNMP				
Interface					
Communication Interface:	10M/100M Base-TX Ethernet				
Edge Storage	Micro SD, up to 512GB				
Audio Input Interface	Built-in Microphone / 1 Line Input: impedance 35 kΩ, amplitude 2 V [p-p]				
Audio Output Interface	1 Line Output: impedance 600 Ω, amplitude 2 V [p-p]				
Audio Compression	G.711U, G.711A				
External I/O Terminals	1/1				
DORI					
DORI Distance	Lens (mm)	Detect (m)	Observe (m)	Recognize (m)	Identify (m)
	2.8	43.4 (142.4 ft.)	17.4 (57.1 ft.)	8.7 (28.5 ft.)	4.3 (14.1 ft.)
	12	186.2 (610.9 ft.)	74.5 (244.4 ft.)	37.2 (122.1 ft.)	18.6 (61.0 ft.)
General					
Safety	CE LVD (EN 62368-1) UL/CUL (UL 62368-1, CAN/CSA C22.2 No. 62368-1)				
EMC	FCC: FCC 47 CFR part15 B CE-EMC: EN 55032/ EN 55035/ EN IEC 61000-3-2/ EN 61000-3-3				
Operating Conditions:	Temperature: -30°C ~ 60°C (-22°F ~ 140°F), Humidity: ≤95% RH (Non-Condensing)				
Power Consumption:	Max 8.0 W				
Power Supply:	DC 12V±25%, PoE (IEEE 802.3af)				
Weatherproof Rating:	IP67				
Vandal Resistant:	IK10				
Dimensions:	Ø 128mm x 100mm (Ø5.0" x 3.9") (Ø × H)				
Net Weight:	0.66 kg (1.46 lb.)				
Software:	No license required for use with Video Insight Software				

Optional Accessories

JUNCTION BOX	 M-JB-T	+		M-NPT34
WALL	 M-WM-T-V2			
POLE	 M-WM-T-V2	+		M-PM-B-V2
PENDANT	 M-JB-T	+		M-Pendant

© i-PRO Co., Ltd. All Rights Reserved. i-PRO, Viewnetcam.com, advidia, VideoInsight, CloUDE, and Unified Digital Evidence are registered trademarks or trademarks of i-PRO Co., Ltd. or i-PRO Americas Inc. in various jurisdictions. All other trademarks are the property of their respective owners.