M-26-FW-V2

2MP Fixed Dome IP Camera

Overview

- 2 Megapixel IR
- WDR 120dB
- 2.8mm Fixed Lens
- H.265, H.264, MJPEG
- IP67, IK10
- Built-in Mic
- NDAA Compliant
- ONVIF Profile G, S, T



Technical Specifications

Device	
Image Sensor:	1 / 2.8" Progressive Scan CMOS
Min Illumination:	Color: 0.01Lux (F2.0, AGC ON) | 0Lux with IR
Shutter Time:	Auto/Manual, 1 ~ 1/100000s
Lens:	2.8mm@F2.0
WDR:	120 dB
Angle of View:	H: 112.9°, V: 59.1°, D: 121.2°
S/N:	>52dB
Angle Adjustment:	Pan: 8° ~ 360° | Tilt: 0° ~ 68° | Rotate: 10° ~ 360°
Day & Night:	IR-Cut Filter with Auto Switch (ICR)
IR Range:	Up to 30m (98.4ft) IR range
Compression Standard	
Video Compression:	H.265, H.264, MJPEG
Video Bit Rate:	128 Kbps~6 Mbps
Two Stream:	Yes
Analytics:	Motion Detection, Ultra motion detection, Tampering alarm, Audio detection, Cross line (based on human body detection), Intrusion (based on human body detection)
Image	
Max. Image Resolution:	1920 x 1080
Frame Rate:	30fps (1920 x 1080)
ROI Codec:	Support (Up to 8 areas)
Image Setting:	White Balance, Digital Noise Reduction, Smart IR, Flip, HLC, BLC, Digital defog
Privacy Mask:	4 Areas

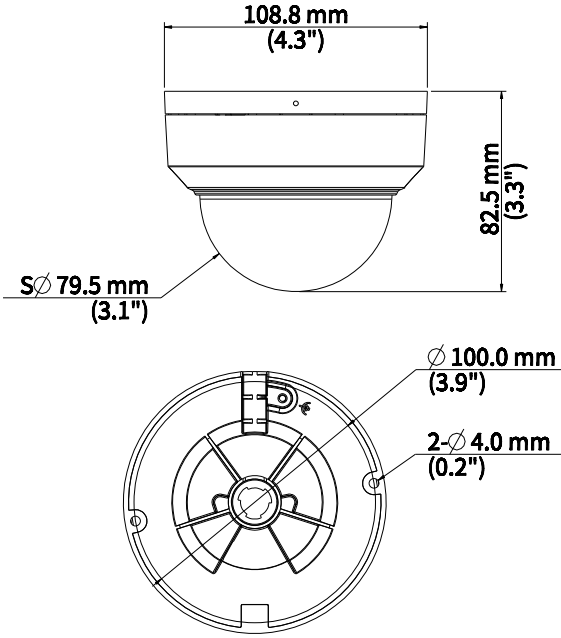

advidia

M-26-FW-V2

2MP Fixed Dome IP Camera

Technical Specifications

Network					
Protocols:	IPv4, IGMP, ICMP, ARP, TCP, UDP, DHCP, RTP, RTSP, RTCP, RTMP, DNS, DDNS, NTP, FTP, UPnP, HTTP, HTTPS, SMTP, QoS, SSL/TLS, SNMP				
Interface					
Communication Interface:	10M/100M Base-TX Ethernet				
Edge Storage	Micro SD, up to 512GB				
Audio	Built-in Mic				
Audio Compression	G.711U, G.711A				
DORI					
DORI	Lens (mm)	Detect (m)	Observe (m)	Recognize (m)	Identify (m)
Distance:	2.8	42.0	16.8	8.4	4.2
General					
Safety	CE LVD (EN 62368-1),UL/CUL (UL 62368-1, CAN/CSA C22.2 No. 62368-1)				
EMC	FCC: FCC 47 CFR part15 B CE-EMC: EN 55032/ EN 55035/ EN IEC 61000-3-2/ EN 61000-3-3				
Operating Conditions:	Temperature: -30°C~60°C (-22°F~140°F), Humidity: ≤95% RH (Non-Condensing)				
Power Consumption:	Max 3.5 W				
Power Supply:	DC 12V±25%, PoE (IEEE 802.3af)				
Weatherproof Rating:	IP67				
Vandal Resistant:	IK10				
Dimensions:	Φ109 x 83mm (Ø4.3" x 3.3")				
Net Weight:	0.34kg (0.75 lb)				
Software:	No license required for use with Video Insight Software				

Optional Accessories

JUNCTION BOX		M-JB-MINI	+		M-NPT34
WALL		M-WM-JB-MINI-V2	OR		M-WM-MINI
POLE		M-WM-JB-MINI-V2 OR M-WM-MINI	+		M-PM-B-V2
PENDANT		M-JB-MINI	+		M-Pendant

© i-PRO Co., Ltd. All Rights Reserved. i-PRO, Viewnetcam.com, advidia, VideoInsight, CloUDE, and Unified Digital Evidence are registered trademarks or trademarks of i-PRO Co., Ltd. or i-PRO Americas Inc. in various jurisdictions. All other trademarks are the property of their respective owners.